A Project On

Automatic Doorbell Ringing System by Using Object Detection.

A Project Submitted to the dept. of Electrical and Electronic Engineering as a Minor Project in 2nd year .

Submitted By :

Name: Forhad Hossain

Roll no: 1515032

Reg. no: 1166

Session: 2015-16

Dept.of Electrical & Electronic Engineering Islamic University, Bangladesh.

DEPT. OF ELECTRICAL & ELECTRONIC ENGINEERING
ISLAMIC UNIVERSITY, BANGLADESH.

1. INTRODUCTION

This is one of the very interesting and much useful circuits in our real life named "Automatic Doorbell Ringing System". If we install this automatic doorbell using object detection circuit, the circuit will automatically sense the presence of the person and it rings the doorbell.

This circuit operates using a pair of ultrasonic transmitter and receiver modules which are used to detect the person and then if the person is detected, the door bell is automatically turned ON when the person is in-front of the door.

1.1. PURPOSE OF THE PROJECT

Here we are going to see some points regarding to purpose behind choosing this topic & what is the requirement of this type of the project in our day to day life.

- Saves time for searching door bell
- Save electricity
- Enhance security
- Save manpower

2. PROJECT REQUIRMENTS

1. RESISTORS
   - 12 K -- 1Nos
   - 4.7 M -- 1Nos
   - 1M -- 2Nos
   - 900 OHM -- 1Nos
   - 400 K -- 1Nos
   - 300 K -- 1Nos
   - 680 OHM -- 1Nos
   - 600 K -- 1Nos
   - 3.3 K -- 1Nos
   - 500 K VARIABLE
   - 10 K VARIABLE
   - 1 K
2. CAPACITORS:
   - 0.47MF
   - 0.001MF
3. TRANSISTORS:
   - BC 337
   - BC 327
4. IC's:
   - IC 555
   - IC LM324
5. OTHER COMPONENTS:
   - IR LED -- 1Nos
   - IN 4001 -- 1Nos
   - BUZZER
   - ULTRASONIC TRANSMITTER AND RECEVIER

3. CIRCUIT DIAGRAM

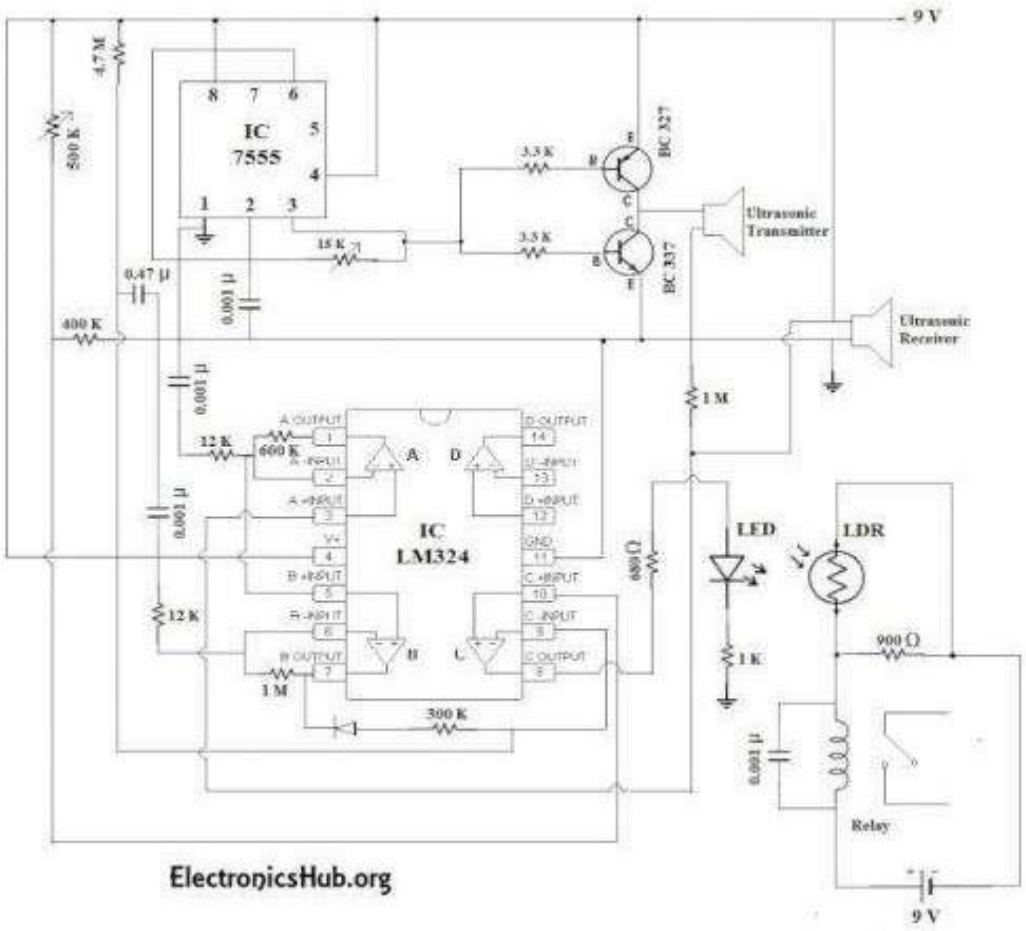

Figure 1 : Circuit Diagram

The ultrasonic transmitter operates at a frequency of about 40 kHz, which means it continuously transmits the ultrasonic waves of about 40 kHz. The power supplied should be moderate such that the range of the transmitter is only about one or two meters. If the transmitting power is less than one meter, then there is a possibility that the person who is one meter away will not be detected. Likewise, if the range is set higher, then it may lead to false triggering which means that objects from afar maybe considered as visitors triggering the circuit. So to avoid these problems, the transmitting power is kept to an optimum level.

The ultrasonic receiver module receives the power with the frequency the same as that of the transmitter so that the noise will be eliminated and minimized false triggering. The sensitivity of the receiver can be tuned by using a 500 kilo-ohm variable resistor arranged as a pot in the circuit. By tuning this properly, we can achieve the desired results. The buzzer circuit is the

output load which acts a doorbell in the case. The receiver circuit uses the integrated circuit LM324 which has 4 operational amplifier internally. Out of the four, three operational amplifiers only are being utilized.

The three op-amps are arranged in cascade to provide high gain as well as noise free output. An optocoupler is used at the output to avoid any interaction between the circuit and the doorbell.

Assemble the circuit on a PCB as compactly as possible and then attach it to the main door. You may provide a power supply using a 9 VDC adapter with filtered and regulated output. If the 9 V adapter with regulated output is not available, then we recommend you to use a 12 V unregulated DC adapter with 7809 voltage regulator

3.1. MAIN COMPONENTS USED

3.1.1. IC 7555

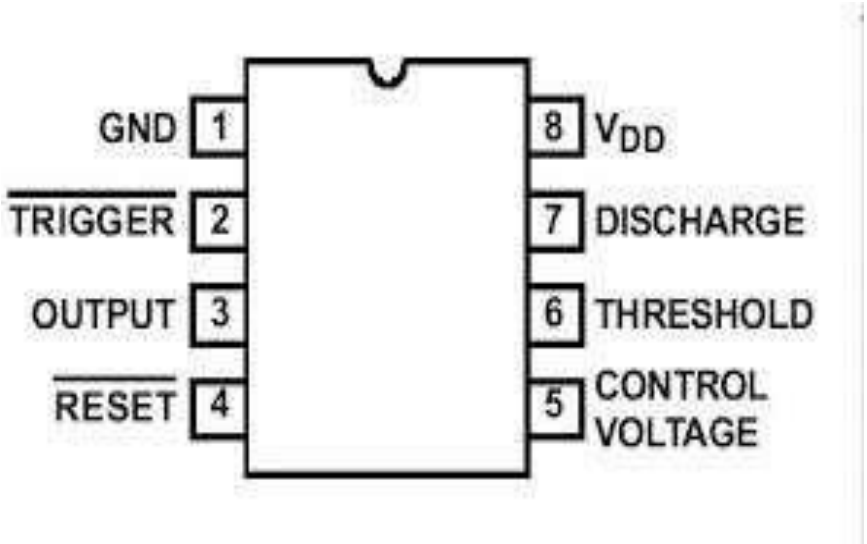

Figure 2 : IC 7555

KEY FEATURES

- Exact Equivalent in Most Cases for SE/NE555/556 or TLC555/556
- Low Supply Current
- ICM7555 60µA
- ICM7556 120µA
- Extremely Low Input Currents 20pA
- High Speed Operation 1MHz

- Guaranteed Supply Voltage Range 2V to 18V
- Temperature Stability 0.005%/°C at 25°C
- Normal Reset Function - No Crowbarring of Supply During Output Transition
- Can be Used with Higher Impedance Timing Elements than Regular 555/6 for Longer RC Time Constants
- Timing from Microseconds through Hours
- Operates in Both Astable and Monostable Modes
- Adjustable Duty Cycle
- High Output Source/Sink Driver can Drive TTL/CMOS
- Outputs have Very Low Offsets, HI and LO
- Pb-Free Available (RoHS Compliant)

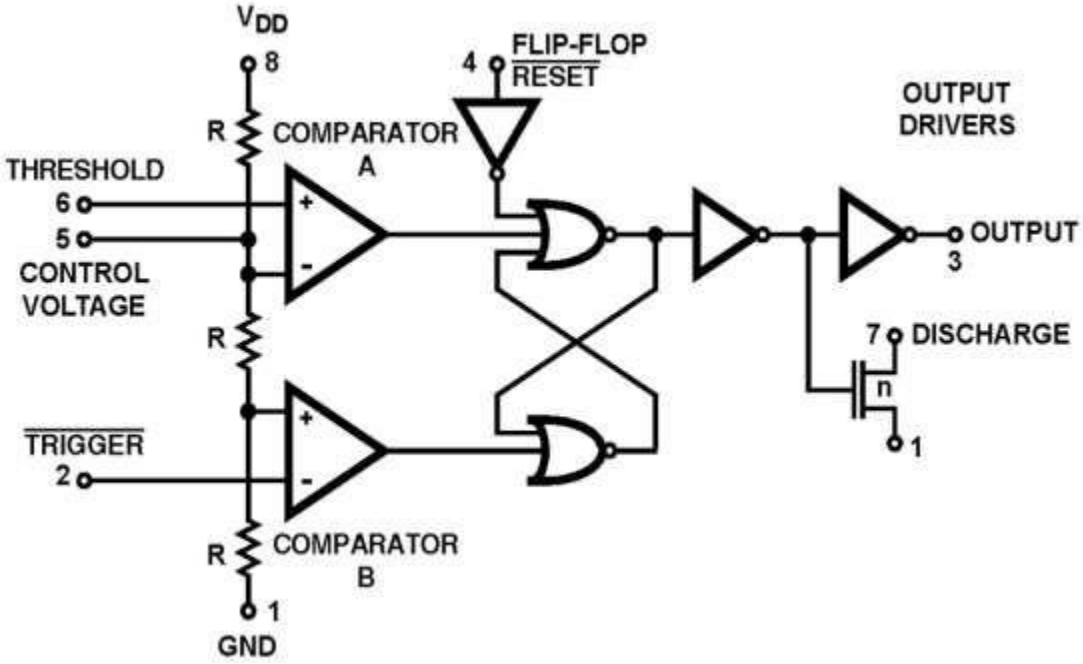

Figure 3 : Typical Diagram of IC 7555

DESCRIPTION

The ICM7555 and ICM7556 are CMOS RC timers providing significantly improved performance over the standard SE/NE555/6 and 355 timers, while at the same time being direct replacements for those devices in most applications. Improved parameters include low

supply current, wide operating supply voltage range, low THRESHOLD, TRIGGER and RESET currents, no crow barring of the supply current during output transitions, higher frequency performance and no requirement to decouple CONTROL VOLTAGE for stable operation.

Specifically, the ICM7555 and ICM7556 are stable controllers capable of producing accurate time delays or frequencies. The ICM7556 is a dual ICM7555, with the two timers operating independently of each other, sharing only V+ and GND. In the one shot mode, the pulse width of each circuit is precisely controlled by one external resistor and capacitor. For astable operation as an oscillator, the free running frequency and the duty cycle are both accurately controlled by two external resistors and one capacitor. Unlike the regular bipolar 555/6 devices, the CONTROL VOLTAGE terminal need not be decoupled with a capacitor. The circuits are triggered and reset on falling (negative) waveforms, and the output inverter can source or sink currents large enough to drive TTL loads, or provide minimal offsets to drive CMOS loads.

APPLICATIONS

- Precision Timing
- Pulse Generation
- Sequential Timing
- Time Delay Generation
- Pulse Width Modulation
- Pulse Position Modulation
- Missing Pulse Detector

3.1.2. IC LM324

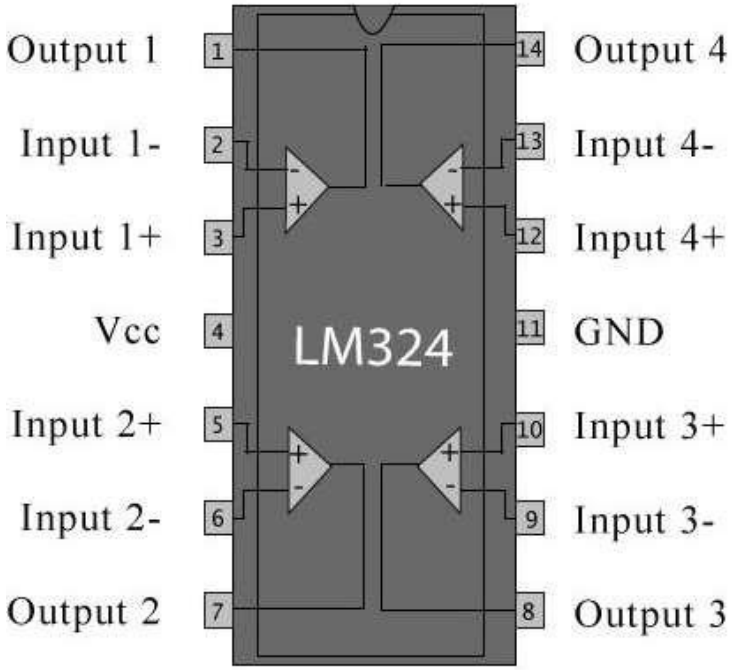

Figure 4 : LM324 Pin Diagram

LM324 is a 14-pin IC consisting of four independent operational amplifiers (op-amps) compensated in a single package. Op-amps are high gain electronic voltage amplifier with differential input and, usually, a single-ended output. The output voltage is many times higher than the voltage difference between input terminals of an op-amp.

These op-amps are operated by a single power supply LM324 and need for a dual supply is eliminated. They can be used as amplifiers, comparators, oscillators, rectifiers etc. The conventional op-amp applications can be more easily implemented with LM324.

PRINCIPLES AND APPLICATIONS OF THE OP AMP LM324

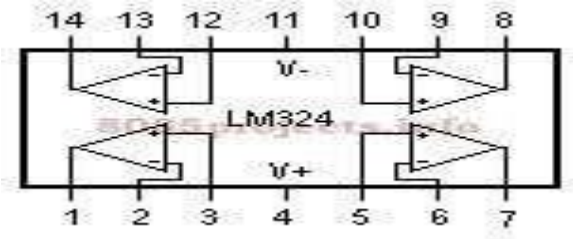

Figure 5 : LM324 Block Diagram

In this, high-performance integrated LM324 quad op amp parameters, the practical circuit design, discusses the circuit. LM324 is a quad op amp integrated circuit, which uses 14-pin dual in-line plastic package, shape as shown. It contains four sets of the internal op amp in exactly the same form, in addition to power sharing, the four independent amplifier. Operational amplifier for each group of symbols shown in Figure 1 can be used to indicate that it has 5 leads to the foot, which "+","-" two signal input, "V +", "V-" is positive, negative power supply side, "Vo" for the output. Two signal input in the, Vi-(-) for the inverting input, said operational amplifier output Vo of the signal with the input bit contrary; Vi + (+) for the same phase input, said operational amplifier output Vo of the signal phase with the same input. LM324 pin-out is shown in Figure 6.

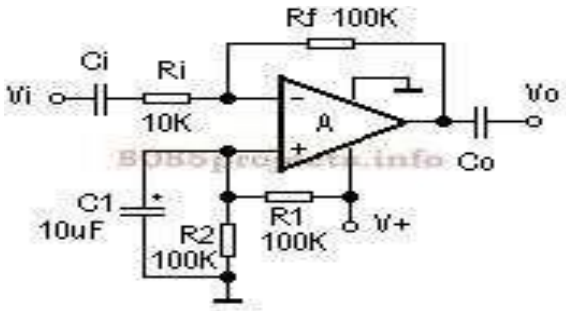

Figure 6 : LM324 Pin Out

The LM324 quad op amp circuit has a supply voltage range, the static power consumption, power usage can be a single, low cost, etc., is widely used in various circuits. Here are examples of its application.

LM324 exchange for inverting amplifier

This amplifier can be amplified to communicate instead of transistors, amplifiers can be used for pre-amplification. Single supply amplifier, by R1, R2 biases the composition 1/2V +, C1 is the capacitance of vibration.

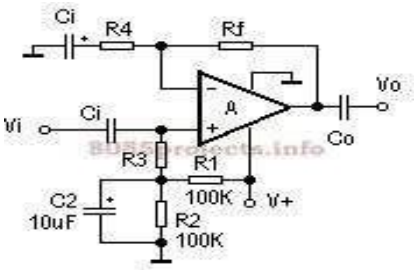

Figure 7 : LM324 exchange for inverting amplifier

Amplifier voltage gain Av only by the external resistor Ri, Rf decision: Av =- Rf / Ri. Minus the output signal and input signal phase contrast. Values given by the figure, Av =- 10. The circuit input resistance Ri. Under normal circumstances the first to take the signal source resistance Ri are equal, then the requirements of the selected magnification Rf. Co and Ci is the coupling capacitance.

LM324 AMPLIFIER FOR COMMUNICATION WITH THE PHASE

Phase AC amplifier with high input impedance characteristics. One of R1, R2 voltage divider composed of 1/2V +, R3 of the op amp through the bias. Circuit voltage gain Av is only determined by external resistor: Av = 1 + Rf/R4, the circuit input resistance R3. R4 resistance range for thousands of ohms to tens of thousands of ohms.

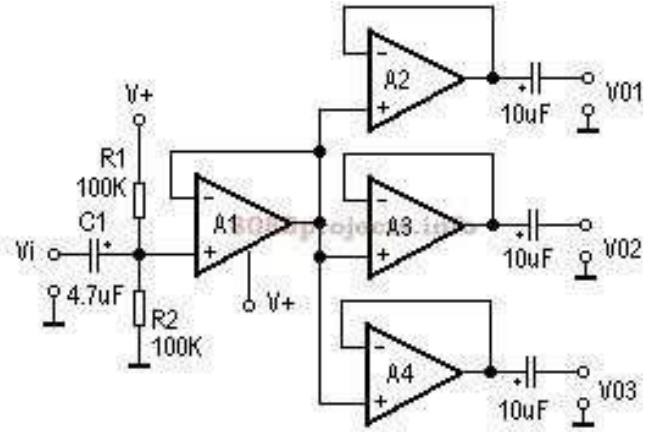

Figure 8 : LM324 amplifier for communication with the phase

LM324 THREE DISTRIBUTION AMPLIFIERS FOR AC SIGNAL

This circuit can be input AC signal into three outputs, three signals can be used to indicate, respectively, control and analysis purposes. The minimal impact on the signal source. Ai due to op amp input resistance, op amp A1-A4 are the output directly to the negative input, the signal input to positive input terminal, the equivalent of state-phase amplified the situation Rf = 0, so the voltage amplification factor of the amplifier are 1, with the discrete components of the emitter follower same effect.

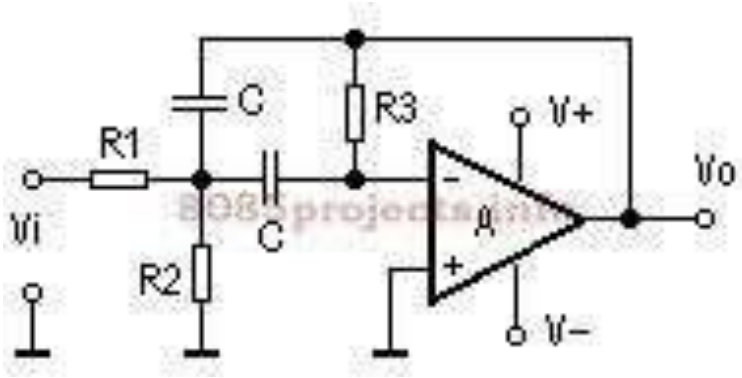

Figure 9 : LM324 three distribution amplifiers for ac signal

R1, R2 form 1/2V + offset, static A1 output voltage 1/2V +, so the op amp output of A2-A4 also 1/2V +, by blocking input and output capacitance effect, remove the AC signal, the formation of three Road distribution output.

LM324 FOR ACTIVE BAND PASS FILTER

Spectrum analyzer in many audio devices are using this circuit as a band-pass filter, to select different frequency signal, the display on the use of LED lights to indicate the number of the signal amplitude. The active center frequency of bandpass filter, At the center frequency fo voltage gain Ao = B3/2B1, quality factor, 3dB bandwidth of B = 1 / (π * R3 * C) can also be designed to determine Q, fo, Ao values, to calculate the band-pass filter component values. R1 = Q / (2πfoAoC), R2 = Q / ((2Q2-Ao) * 2πfoC), R3 = 2Q / (2πfoC). Where, the time when the fo = 1KHz, C take 0.01Uf. This circuit can be used for general frequency-selective amplification.

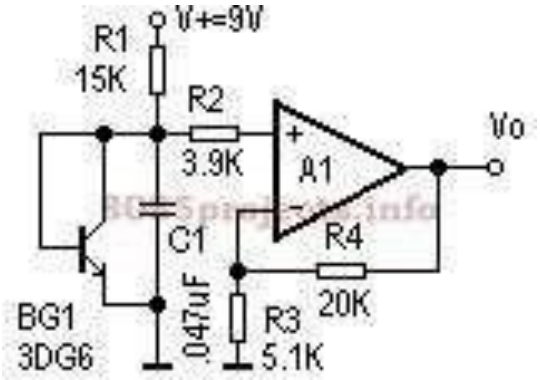

Figure 10 : LM324 for Active Band Pass Filter

This circuit can also use a single power supply, just the positive input of op amp bias resistor R2 in the bottom of 1/2V + and received both the positive input of op amp.

LM324 BE USED AS A TEMPERATURE MEASURING CIRCUIT

Temperature probe with a silicon transistor 3DG6, it connected as diodes form. Silicon transistor emitter voltage temperature coefficient is about-2.5mV / ℃, the temperature rise of 1 degree each, varying emitter voltage drop 2.5mV. A1 amplifier connected in phase to enlarge the form of direct current, the higher the temperature the smaller the transistor BG1 pressure drop, the op amp inverting input A1 lower the voltage, the voltage output is also lower.

This is a linear amplification process. Measured in the A1 output termination or processing circuit, the temperature can carry out instructions or other automatic control.

When removed when the op amp's feedback resistor, or the feedback resistor tends to infinity (i.e., open-loop state), theoretically, that the op amp's open loop for infinite magnification (actually a lot, such as the LM324 op opening Central magnification 100dB, only 10 times.) At this point they form an op amp voltage comparator, the output is not as high (V +), is low (V-or ground). When the positive input voltage is higher than the negative input voltage, the op amp output low.

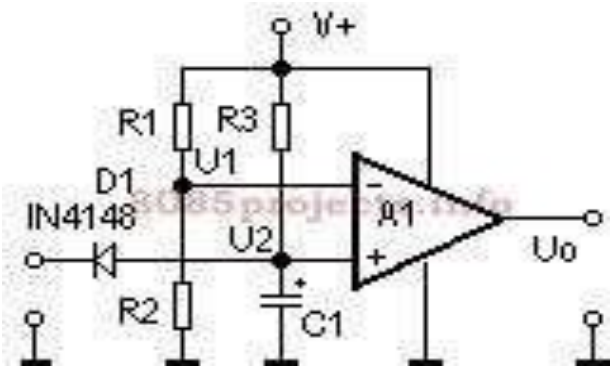

Figure 11 : Op Amp Output Low

FEATURES

1. Internally Frequency Compensated for Unity
2. Large DC Voltage Gain 100 dB Single Package
3. Wide Bandwidth (Unity Gain) 1 MHz

4. Wide Power Supply Range:
   - Single Supply 3V to 32V
   - or Dual Supplies ±1.5V to ±16V DESCRIPTION
5. Very Low Supply Current Drain (700 μ A)—Essentially Independent of Supply Voltage
6. Low Input Biasing Current 45 nA (Temperature Compensated)
7. Low Input Offset Voltage 2 mV
   - and Offset Current: 5 nA
8. Input Common-Mode Voltage Range Includes Ground
9. Differential Input Voltage Range Equal to the Power Supply Voltage
10. Large Output Voltage Swing 0V to V+ − 1.5V

Electrical Characteristics

Parameter		Conditions	LM124A			LM224A			LM324A			Units
			Min	Typ	Max	Min	Typ	Max	Min	Typ	Max	
Input Offset Voltage		$T_A = 25°C$ (2)		1	2		1	3		2	3	mV
Input Bias Current (3)		$I_{IN(+)}$ or $I_{IN(-)}$, $V_{CM} = 0V$, $T_A = 25°C$		20	50		40	80		45	100	nA
Input Offset Current		$I_{IN(+)}$ or $I_{IN(-)}$, $V_{CM} = 0V$, $T_A = 25°C$		2	10		2	15		5	30	nA
Input Common-Mode Voltage Range (4)		$V^+ = 30V$, (LM2902-N, $V^+ = 26V$), $T_A = 25°C$	0		$V^+-1.5$	0		$V^+-1.5$	0		$V^+-1.5$	V
Supply Current		Over Full Temperature Range $R_L = \infty$ On All Op Amps $V^+ = 30V$ (LM2902-N $V^+ = 26V$) $V^+ = 5V$		 1.5 0.7	 3 1.2		 1.5 0.7	 3 1.2		 1.5 0.7	 3 1.2	mA
Large Signal Voltage Gain		$V^+ = 15V$, $R_L \geq 2k\Omega$, ($V_O = 1V$ to $11V$), $T_A = 25°C$	50	100		50	100		25	100		V/mV
Common-Mode Rejection Ratio		DC, $V_{CM} = 0V$ to $V^+ - 1.5V$, $T_A = 25°C$	70	85		70	85		65	85		dB
Power Supply Rejection Ratio		$V^+ = 5V$ to $30V$ (LM2902-N, $V^+ = 5V$ to $26V$), $T_A = 25°C$	65	100		65	100		65	100		dB
Amplifier-to-Amplifier Coupling (5)		f = 1 kHz to 20 kHz, $T_A = 25°C$ (Input Referred)		−120			−120			−120		dB
Output Current	Source	$V_{IN}^+ = 1V$, $V_{IN}^- = 0V$, $V^+ = 15V$, $V_O = 2V$, $T_A = 25°C$	20	40		20	40		20	40		mA
	Sink	$V_{IN}^- = 1V$, $V_{IN}^+ = 0V$, $V^+ = 15V$, $V_O = 2V$, $T_A = 25°C$	10	20		10	20		10	20		mA
		$V_{IN}^- = 1V$, $V_{IN}^+ = 0V$, $V^+ = 15V$, $V_O = 200$ mV, $T_A = 25°C$	12	50		12	50		12	50		μA
Short Circuit to Ground		$V^+ = 15V$, $T_A = 25°C$ (6)		40	60		40	60		40	60	mA
Input Offset Voltage		See (2)			4			4			5	mV
V_{OS} Drift		$R_S = 0\Omega$		7	20		7	20		7	30	μV/°C
Input Offset Current		$I_{IN(+)} - I_{IN(-)}$, $V_{CM} = 0V$			30			30			75	nA
I_{OS} Drift		$R_S = 0\Omega$		10	200		10	200		10	300	pA/°C
Input Bias Current		$I_{IN(+)}$ or $I_{IN(-)}$		40	100		40	100		40	200	nA
Input Common-Mode Voltage Range (4)		$V^+ = +30V$ (LM2902-N, $V^+ = 26V$)	0		V^+-2	0		V^+-2	0		V^+-2	V

Table 1 : Electrical Characteristics

4. TRANSISTORS

4.1. BC 327

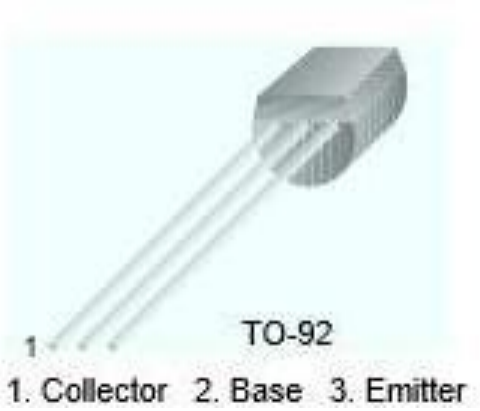

Figure 12 : BC 327

4.1.1. Absolute Maximum Ratings

Symbol	Parameter	Value	Units
V_{CES}	Collector-Emitter Voltage : BC327 : BC328	 -50 -30	 V V
V_{CEO}	Collector-Emitter Voltage : BC327 : BC328	 -45 -25	 V V
V_{EBO}	Emitter-Base Voltage	-5	V
I_C	Collector Current (DC)	-800	mA
P_C	Collector Power Dissipation	625	mW
T_J	Junction Temperature	150	°C
T_{STG}	Storage Temperature	-55 ~ 150	°C

Table 2 : Absolute Maximum Ratings

4.1.2. Electrical Characteristics

Symbol	Parameter	Test Condition	Min.	Typ.	Max.	Units
BV_{CEO}	Collector-Emitter Breakdown Voltage : BC327 : BC328	I_C= -10mA, I_B=0	 -45 -25			 V V
BV_{CES}	Collector-Emitter Breakdown Voltage : BC327 : BC328	I_C= -0.1mA, V_{BE}=0	 -50 -30			 V V
BV_{EBO}	Emitter-Base Breakdown Voltage	I_E= -10μA, I_C=0	-5			V
I_{CES}	Collector Cut-off Current : BC327 : BC328	 V_{CE}= -45V, V_{BE}=0 V_{CE}= -25V, V_{BE}=0		 -2 -2	 -100 -100	 nA nA
h_{FE1} h_{FE2}	DC Current Gain	V_{CE}= -1V, I_C= -100mA V_{CE}= -1V, I_C= -300mA	100 40		630	
V_{CE} (sat)	Collector-Emitter Saturation Voltage	I_C= -500mA, I_B= -50mA			-0.7	V
V_{BE} (on)	Base-Emitter On Voltage	V_{CE}= -1V, I_C= -300mA			-1.2	V
f_T	Current Gain Bandwidth Product	V_{CE}= -5V, I_C= -10mA, f=20MHz		100		MHz
C_{ob}	Output Capacitance	V_{CB}= -10V, I_E=0, f=1MHz		12		pF

Table 3 : Electrical Characteristics

4.1.3. Typical Characteristics

Static Characteristic

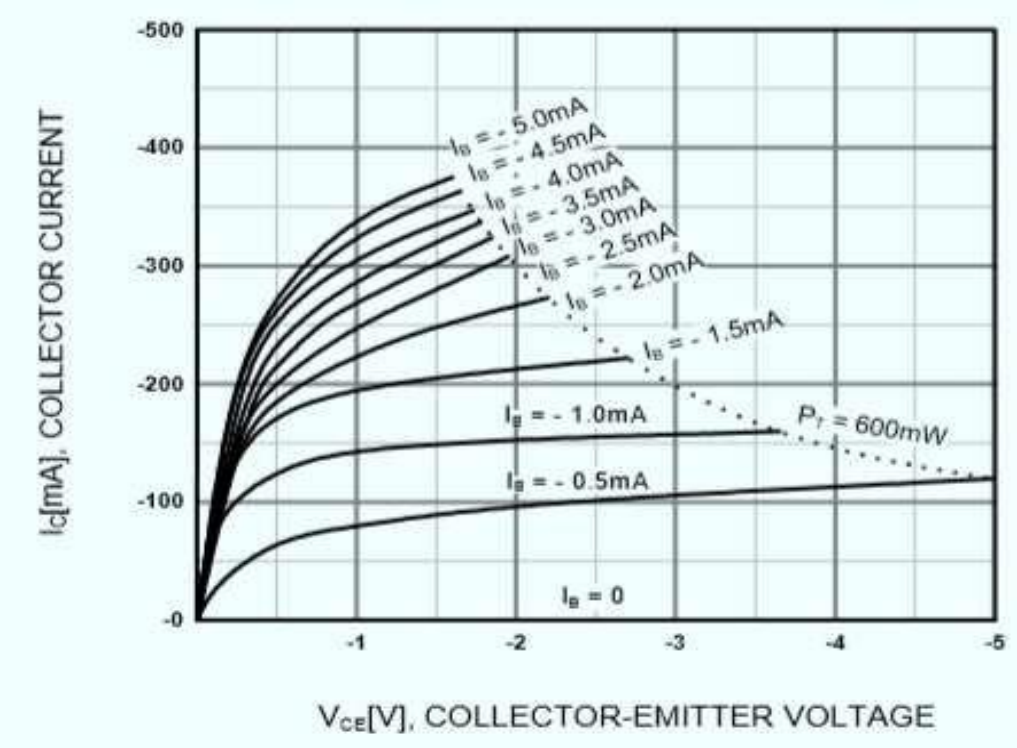

Figure 13 : Static Characteristic

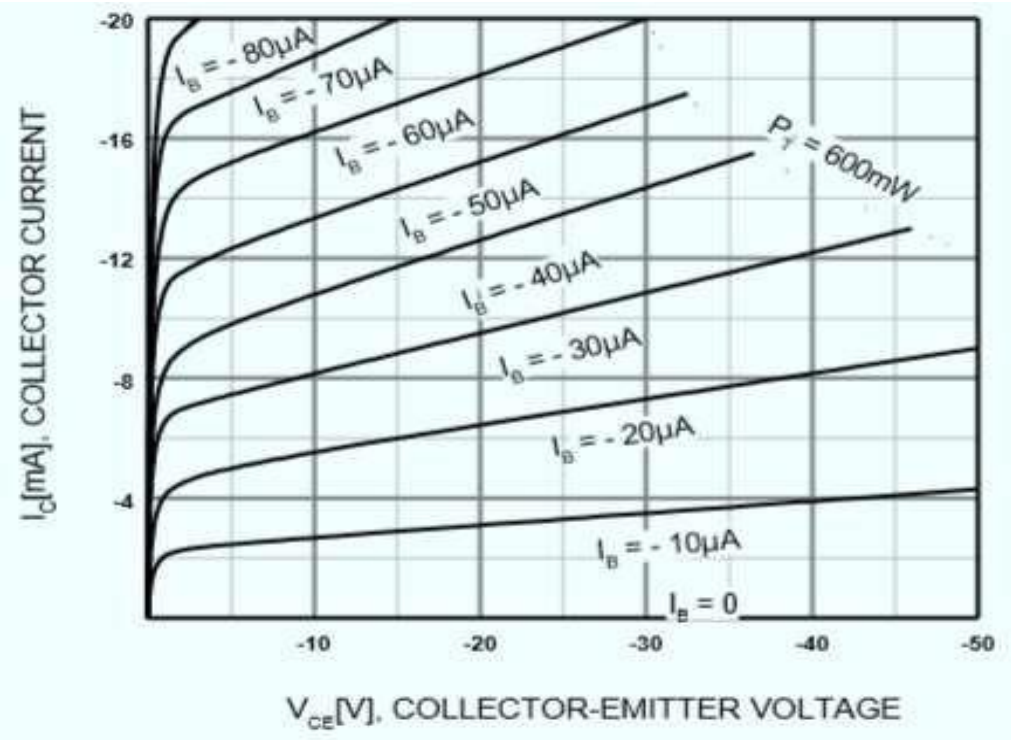

Figure 14 : Static Characteristic

D.C. Current Gain

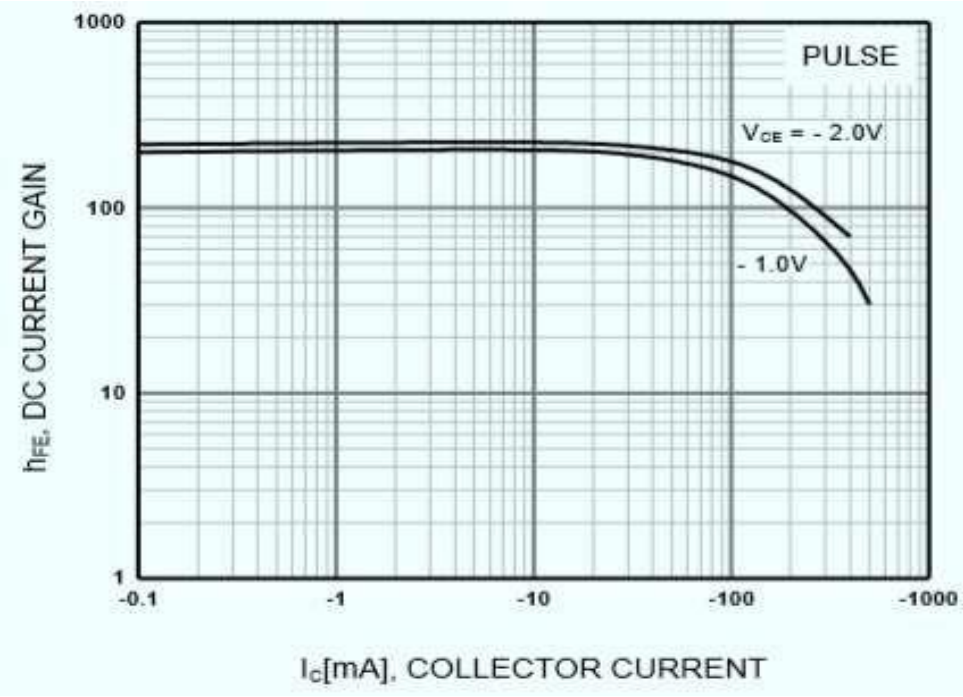

Figure 15 : D.C. Current Gain

Base-Emitter Saturation Voltage Collector-Emitter Saturation Voltage

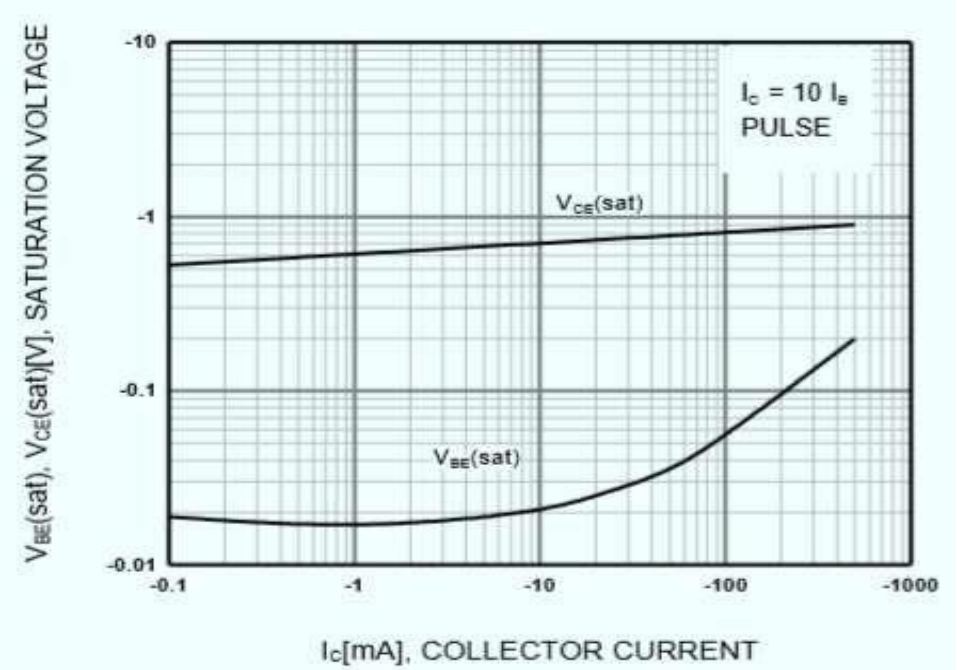

Figure 16 : Base-Emitter Saturation Voltage Collector-Emitter Saturation Voltage

Base-Emitter on Voltage

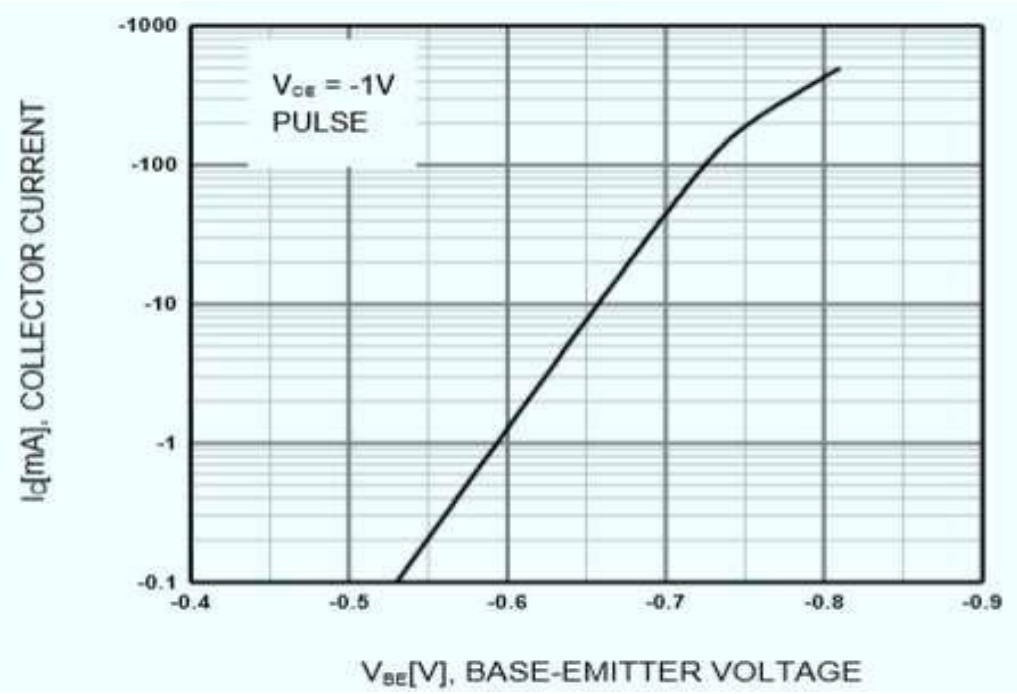

Figure 17 : Base-Emitter on Voltage

Gain Bandwidth Product

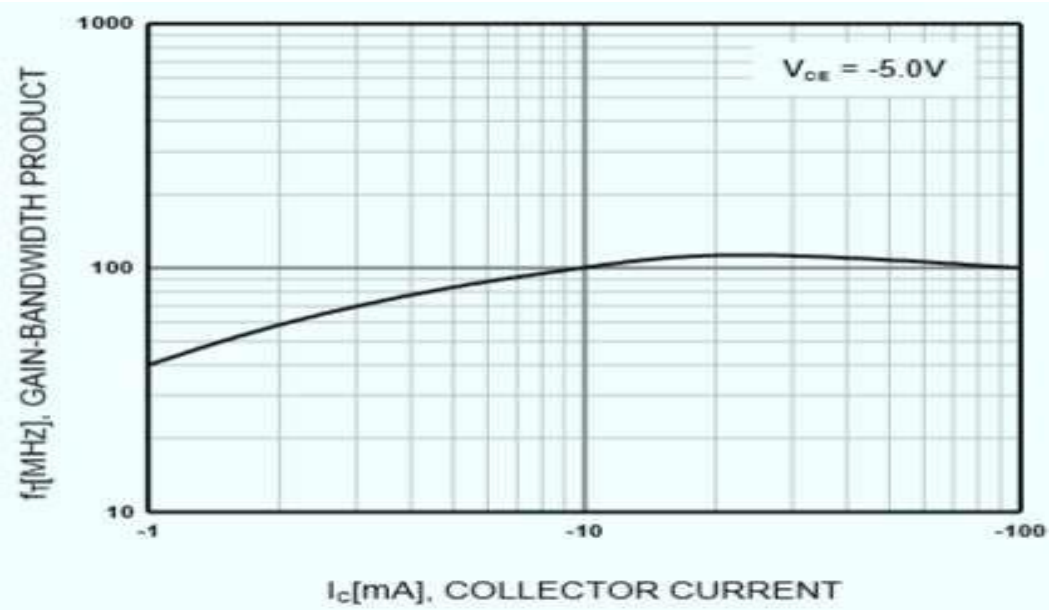

Figure 18 : Gain Bandwidth Product

4.1.4. Package Dimensions

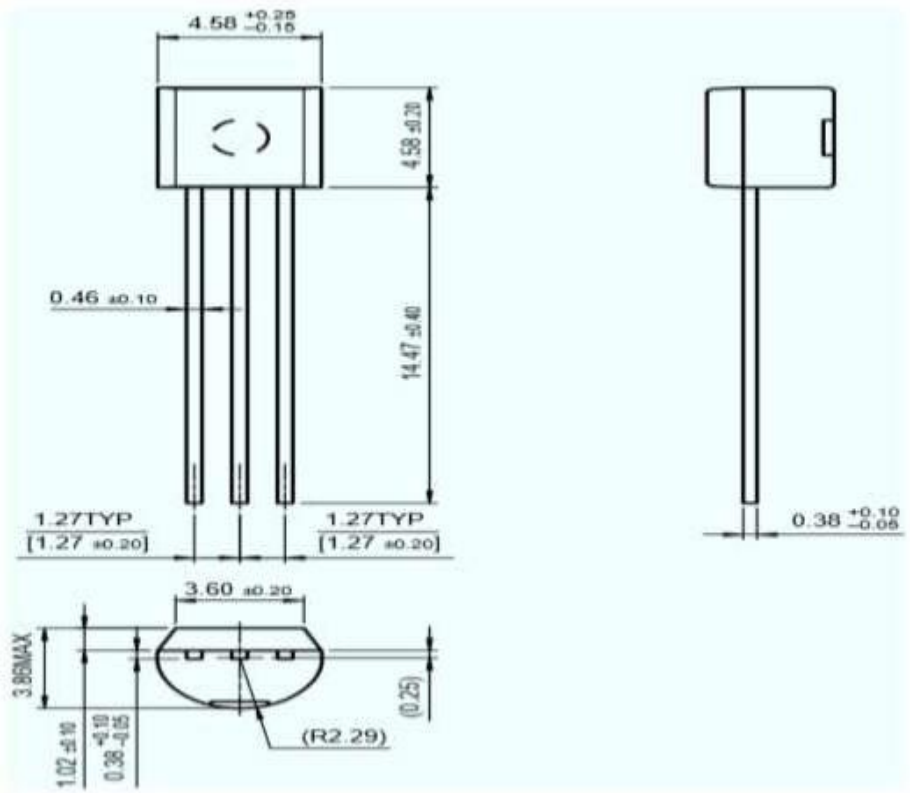

Figure 19 : BC327 Dimensions

4.2. BC337

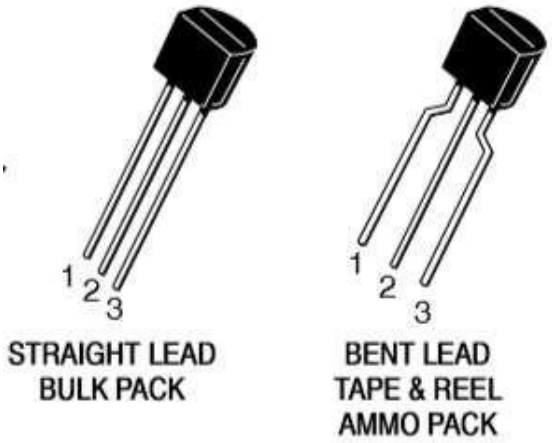

Figure 20 : BC337

4.2.1. Maximum Ratings

Rating	Symbol	Value	Unit
Collector – Emitter Voltage	V_{CEO}	45	Vdc
Collector – Base Voltage	V_{CBO}	50	Vdc
Emitter – Base Voltage	V_{EBO}	5.0	Vdc
Collector Current – Continuous	I_C	800	mAdc
Total Device Dissipation @ T_A = 25°C Derate above 25°C	P_D	625 5.0	mW mW/°C
Total Device Dissipation @ T_C = 25°C Derate above 25°C	P_D	1.5 12	W mW/°C
Operating and Storage Junction Temperature Range	T_J, T_{stg}	−55 to +150	°C

Table 4 : Maximum Ratings

4.2.2. Thermal Characteristics

Characteristic	Symbol	Max	Unit
Thermal Resistance, Junction–to–Ambient	$R_{\theta JA}$	200	°C/W
Thermal Resistance, Junction–to–Case	$R_{\theta JC}$	83.3	°C/W

Table 5 : Thermal Characteristics

4.2.3. Electrical Characteristics

Characteristic	Symbol	Min	Typ	Max	Unit
OFF CHARACTERISTICS					
Collector-Emitter Breakdown Voltage (I_C = 10 mA, I_B = 0)	$V_{(BR)CEO}$	45	–	–	Vdc
Collector-Emitter Breakdown Voltage (I_C = 100 μA, I_E = 0)	$V_{(BR)CES}$	50	–	–	Vdc
Emitter-Base Breakdown Voltage (I_E = 10 μA, I_C = 0)	$V_{(BR)EBO}$	5.0	–	–	Vdc
Collector Cutoff Current (V_{CB} = 30 V, I_E = 0)	I_{CBO}	–	–	100	nAdc
Collector Cutoff Current (V_{CE} = 45 V, V_{BE} = 0)	I_{CES}	–	–	100	nAdc
Emitter Cutoff Current (V_{EB} = 4.0 V, I_C = 0)	I_{EBO}	–	–	100	nAdc
ON CHARACTERISTICS					
DC Current Gain (I_C = 100 mA, V_{CE} = 1.0 V) BC337	h_{FE}	100	–	630	–
BC337-25		160	–	400	
BC337-40		250	–	630	
(I_C = 300 mA, V_{CE} = 1.0 V)		60	–	–	
Base-Emitter On Voltage (I_C = 300 mA, V_{CE} = 1.0 V)	$V_{BE(on)}$	–	–	1.2	Vdc
Collector-Emitter Saturation Voltage (I_C = 500 mA, I_B = 50 mA)	$V_{CE(sat)}$	–	–	0.7	Vdc
SMALL-SIGNAL CHARACTERISTICS					
Output Capacitance (V_{CB} = 10 V, I_E = 0, f = 1.0 MHz)	C_{ob}	–	15	–	pF
Current-Gain – Bandwidth Product (I_C = 10 mA, V_{CE} = 5.0 V, f = 100 MHz)	f_T	–	210	–	MHz

Table 6 : Electrical Characteristics

Active Region – Safe Operating Area

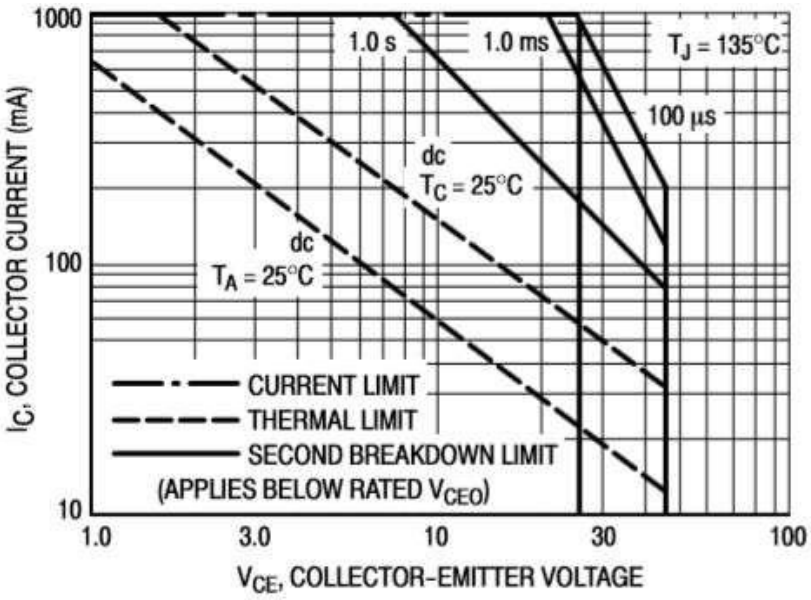

Figure 21 : Active Region – Safe Operating Area

D.C Current Gain

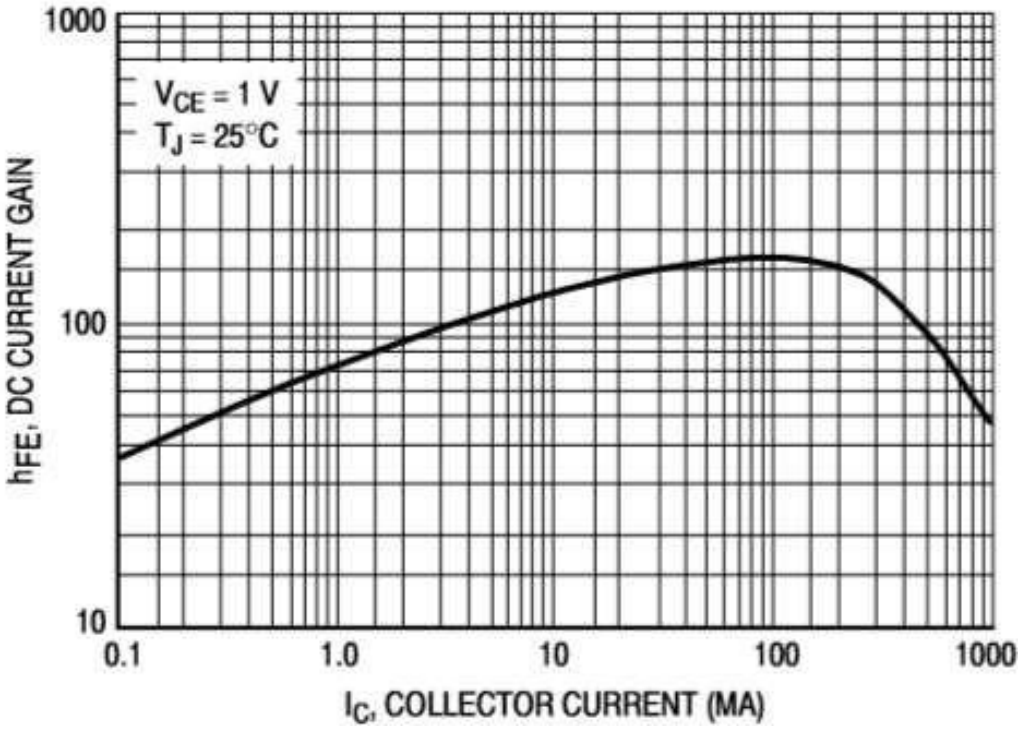

Figure 22 : D.C. Current Gain

Saturation Region

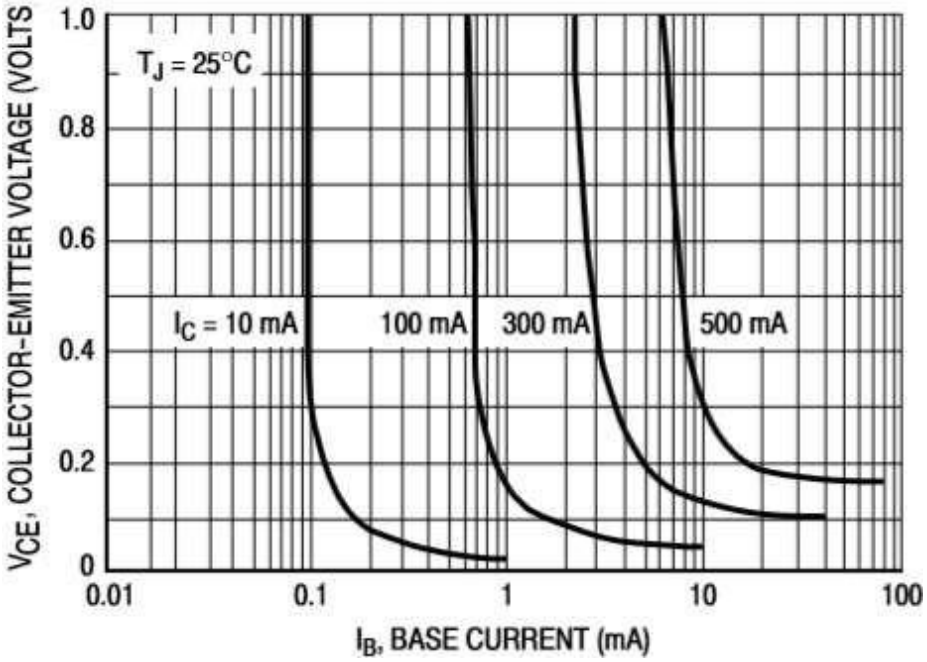

Figure 23 : Saturation Region

"On" Voltages

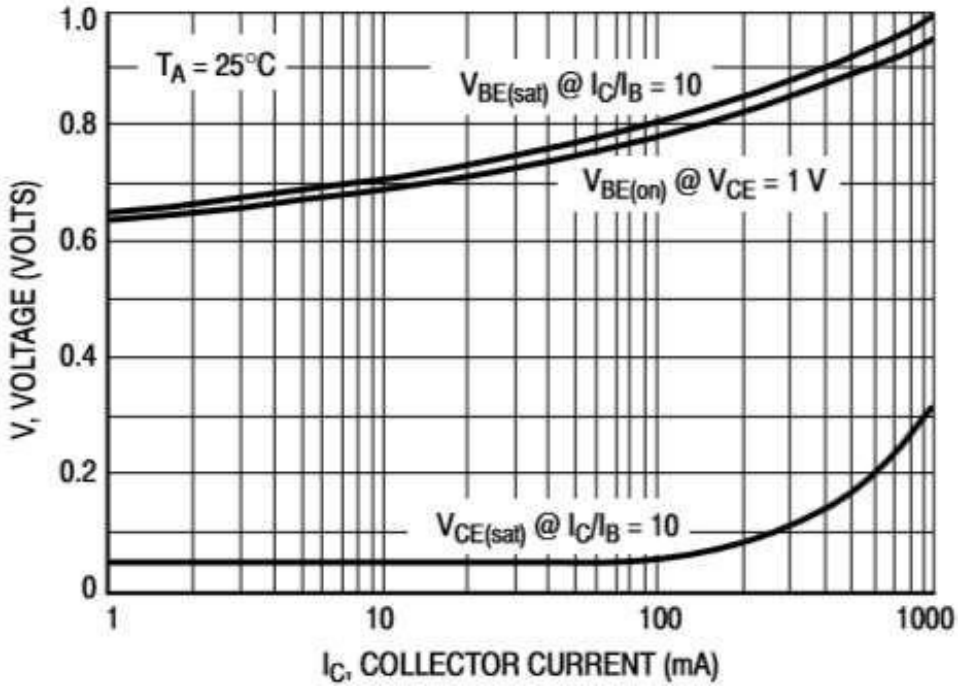

Figure 24 : "On" Voltages

Temperature Coefficients

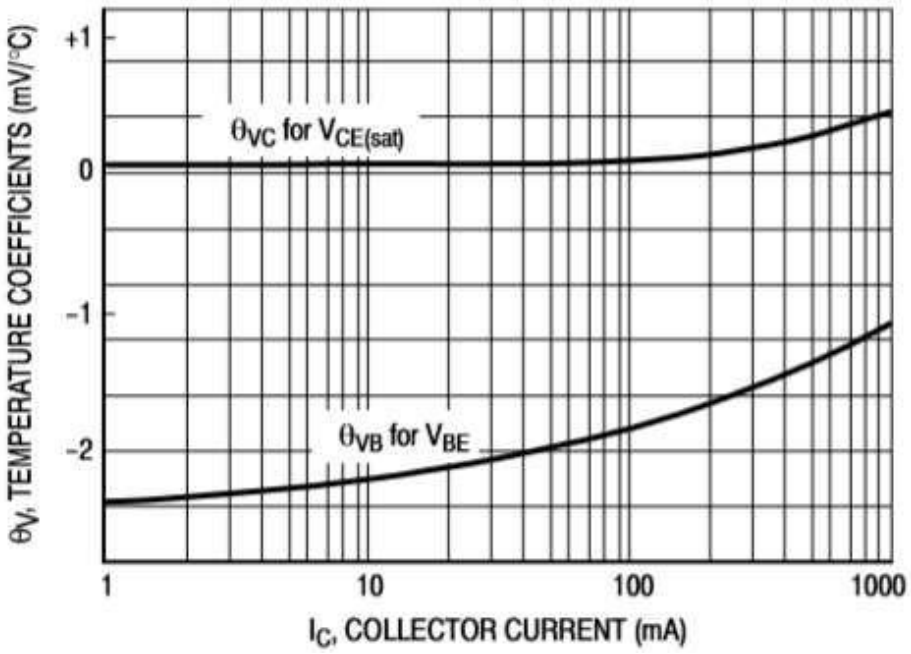

Figure 25 : Temperature Coefficients

Capacitances

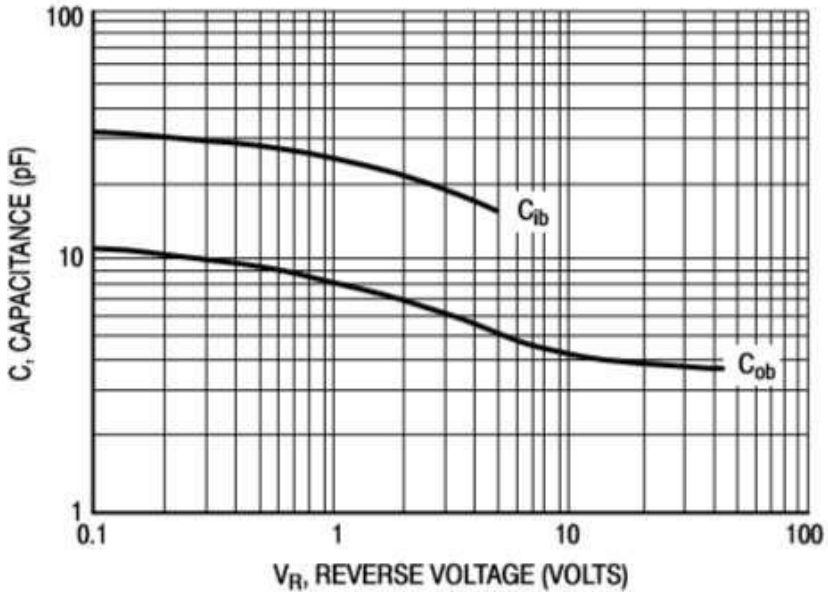

Figure 26 : Capacitances

4.2.4. Package Dimensions

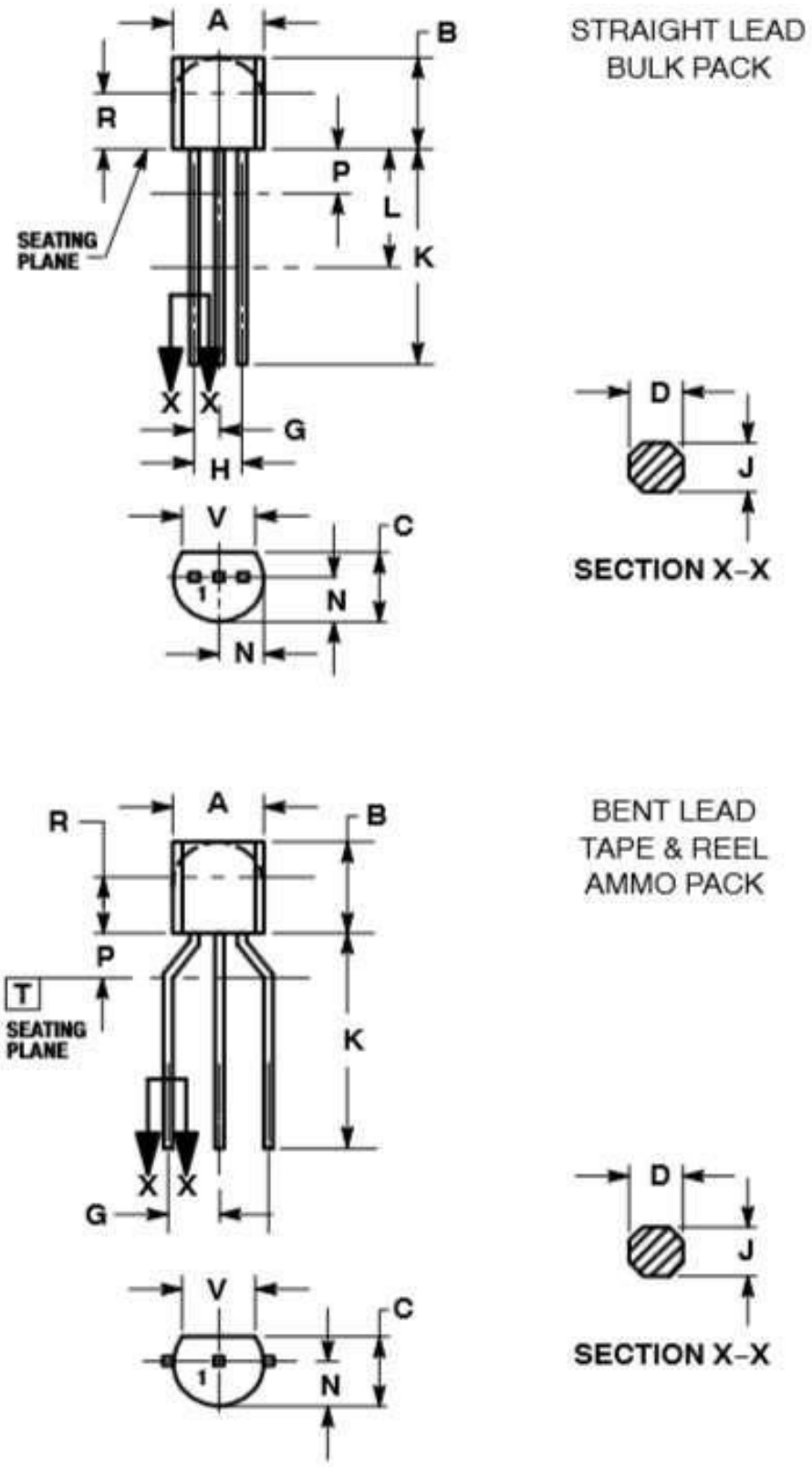

Figure 27 : BC337 Dimension

5. ULTRASONIC TRANSMITTER AND RECEIVER

Most ultrasonic transmitters and receivers are built around timer IC 555 or complementary metal-oxide semiconductor (CMOS) devices. These devices are preset-controlled variable oscillators. The preset value of the working frequency is likely to drift due to mechanical vibrations or variations in temperature. This drift in frequency affects the range of transmission from the ultrasonic transducer.

The ultrasonic transmitter and receiver circuits described here use CD4017 decade counter ICs.

The transmitter circuit (Fig.28) is built around two CD4017 decade counter ICs (IC1 and IC2), D-type flip-flop IC CD4013 (IC3) and a few discrete components. The arrangement generates stable 40kHz signals, which are transmitted by transducer TX.

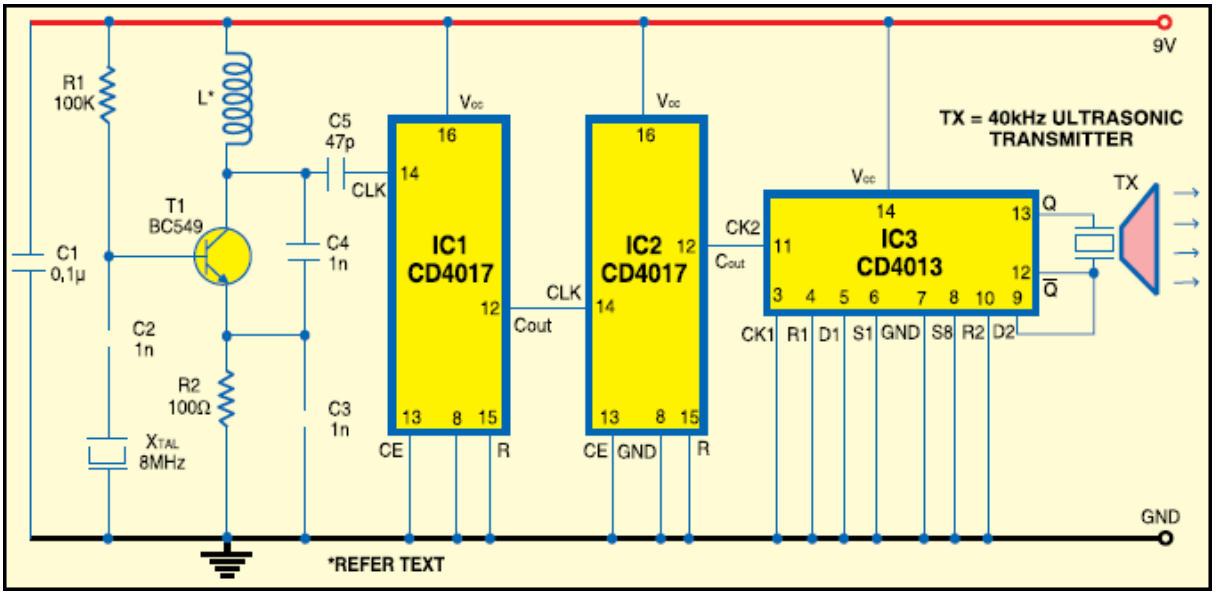

Figure 28 : Transmitter Circuit

The crystal-controlled radio-frequency (RF) oscillator built around transistor T1 (BC549) generates an 8MHz signal, which serves as input to the first decade counter built around IC1. The decade counter divides the oscillator frequency to 800 kHz. The output of IC1 is fed to the second CD4017 decade counter (IC2), which further divides the frequency to 80 kHz.

The flip-flop (IC3) divides 80 kHz signal by 2 to give 40kHz signal, which is transmitted by ultrasonic transducer TX.

Coil L is made with 36SWG enamelled copper wire that is wound 15 times around an 8mm-diameter plastic former as used for radio oscillators, which has a ferrite bead.

The transmitter circuit works off 9-12V DC. The receiver circuit (Fig.29) is built around a single decade counter CD4017 (IC4) and a few discrete components. To check the working of the transmitter, it is necessary to down-convert the 40kHz signal into 4kHz to bring it in the audible range. By using the receiver, the 40kHz ultrasonic transmitter can be tested quickly. The receiver's transducer unit (RX) is kept near the ultrasonic transmitter under test. It detects the transmitted 40kHz signal, which is amplified by the amplifier built around transistor BC549 (T2). The amplified signal is fed to decade counter IC4, which divides the frequency to 4 kHz. Transistor T3 (SL100) amplifies the 4kHz signal to drive the speaker.

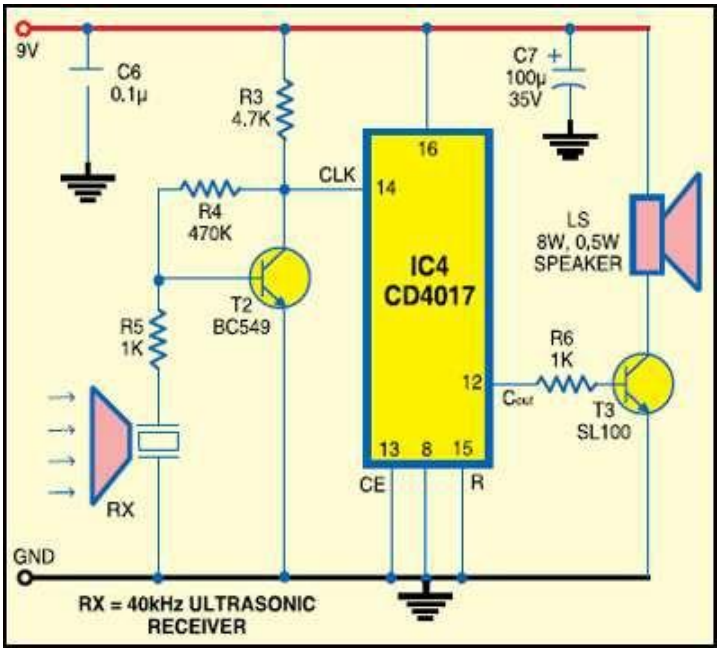

Figure 29 : Receiver Circuit

Use a 9V PP3 battery to power the receiver circuit. House the transmitter and receiver circuits in separate small cabinets. If the 40 kHz transducer under test is working, the receiver circuit produces audible whistling sound.

Figure 30 : Transducer

6. DIODE

Figure 31 : Diode

1N4001 is a member of 1N400x diodes. Diode is a rectifying device which conducts only from anode to cathode. Diode behaves open circuited for the current flow from cathode to anode. 1N4001 is a 1A diode with low forward voltage drop and high surge current capability. It comprises of diffused PN junction and has low reverse leakage current of 5µA. Its DC blocking voltage is 50V.

The cathode (n) is identified by a bar on diode case. The other terminal is the anode (p).

7. LIGHT DEPENDENT RESISTORS

As its name implies, the Light Dependent Resistor (LDR) is made from a piece of exposed semiconductor material such as cadmium sulphide that changes its electrical resistance from several thousand Ohms in the dark to only a few hundred Ohms when light falls upon it by creating hole-electron pairs in the material.

The net effect is an improvement in its conductivity with a decrease in resistance for an increase in illumination. Also, photoresistive cells have a long response time requiring many seconds to respond to a change in the light intensity.

Materials used as the semiconductor substrate include, lead sulphide (PbS), lead selenide (PbSe), indium antimonide (InSb) which detect light in the infra-red range with the most commonly used of all photoresistive light sensors being Cadmium Sulphide (Cds).

Cadmium sulphide is used in the manufacture of photoconductive cells because its spectral response curve closely matches that of the human eye and can even be controlled using a simple torch as a light source. Typical y then, it has a peak sensitivity wavelength (λp) of about 560nm to 600nm in the visible spectral range.

Figure 32 : Light Dependent Resistor

LDRs or Light Dependent Resistors are very useful especially in light/dark sensor circuits. Normally the resistance of an LDR is very high, sometimes as high as 1000 000 ohms, but when they are illuminated with light resistance drops dramatically.

Figure 33 : LDR

The animation opposite shows that when the torch is turned on, the resistance of the LDR falls, allowing current to pass through it.

Circuit Wizard software has been used to display, the range of values of a ORP12, LDR. When a light level of 1000 lux (bright light) is directed towards it, the resistance is 400R (ohms).

When a light level of 10 lux (very low light level) is directed towards it, the resistance has risen dramatically to 10.43M (10430000 ohms).

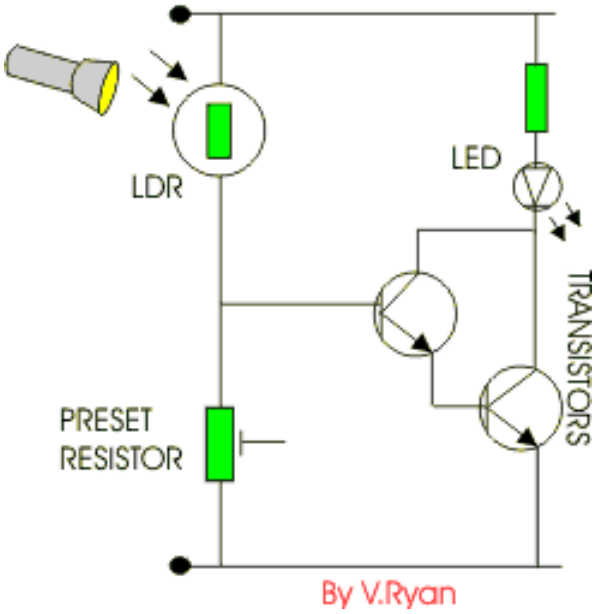

Figure 34 : LDR Working

This is an example of a light sensor circuit :

When the light level is low the resistance of the LDR is high. This prevents current from flowing to the base of the transistors. Consequently the LED does not light. However, when light shines onto the LDR its resistance falls and current flows into the base of the first transistor and then the second transistor. The LED lights.

The preset resistor can be turned up or down to increase or decrease resistance, in this way it can make the circuit more or less sensitive.

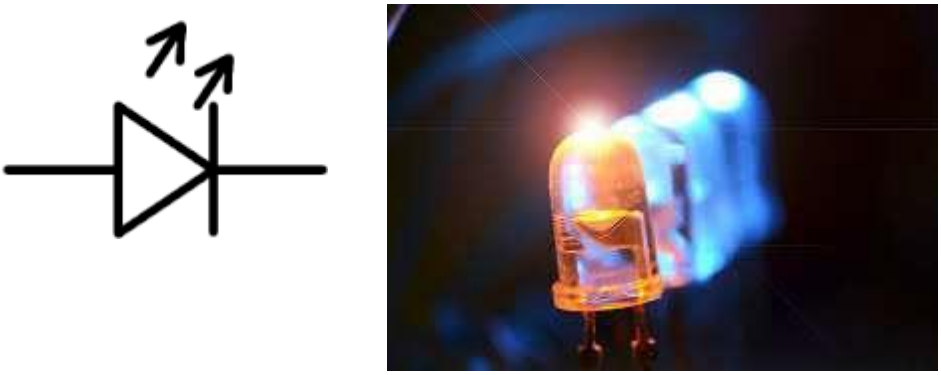

Figure 35 : Light Emitting Diode

A light-emitting diode (LED) is a two-lead semiconductor light source. It is a pn-junction diode, which emits light when activated. When a suitable voltage is applied to the leads, electrons are able to recombine with electron holes within the device, releasing energy in the form of photons. This effect is called electroluminescence, and the color of the light (corresponding to the energy of the photon) is determined by the energy band gap of the semiconductor.

An LED is often small in area (less than 1 mm2) and integrated optical components may be used to shape its radiation pattern.

Appearing as practical electronic components in 1962, the earliest LEDs emitted low-intensity infrared light. Infrared LEDs are still frequently used as transmitting elements in remote-control circuits, such as those in remote controls for a wide variety of consumer electronics. The first visible-light LEDs were also of low intensity, and limited to red. Modern LEDs are available across the visible, ultraviolet, and infrared wavelengths, with very high brightness.

Early LEDs were often used as indicator lamps for electronic devices, replacing small incandescent bulbs. They were soon packaged into numeric readouts in the form of seven-segment displays, and were commonly seen in digital clocks.

Recent developments in LEDs permit them to be used in environmental and task lighting. LEDs have many advantages over incandescent light sources including lower energy consumption, longer lifetime, improved physical robustness, smaller size, and faster switching. Light-emitting diodes are now used in applications as diverse as aviation lighting, automotive headlamps, advertising, general lighting, traffic signals, and camera flashes. However, LEDs powerful enough for room lighting are still relatively expensive, and require

more precise current and heat management than compact fluorescent lamp sources of comparable output.

LEDs have allowed new text, video displays, and sensors to be developed, while their high switching rates are also useful in advanced communications technology.

8. ADVANTAGE & DISADVANTAGE

- Saves time for searching door bell switch.
- Saves electricity.
- Enhances security.
- Saves manpower.

RESULT AND CONCLUSION

This project has based on designing and implementation of doorbell with sound controlled by switch. Doorbells are a common convenience in homes; giving visitors a way of announcing their presence Doorbells are a common convenience in homes, giving visitors a way of announcing their presence and preventing residents from missing deliveries or guests. Doorbells are simple pieces of home equipment that let you know a visitor has arrived. They're useful if you are too far from the front door to hear someone knocking and preventing residents from missing deliveries or guests. Doorbells are simple pieces of home equipment that let you know a visitor has arrived. They're useful if you are too far from the front door to hear someone knocking.

REFERENCES

- Ramkant . A . Gayakward ," op amp and linear integrated circuits",fourth edition , prentice Hall,2000.
- D.Choudhary Roy and Shail B.Jain,"Linear integrated circuits",An international publishers,2003.
- M.H.Rashid ,"Power electronics circuits , devices and applications",Hall international edition,2003
- Sergio Franco ,"Design with operational amplifiers and analog integrated circuits",Tata M C Graw Hill edition,2002